WELD STANDARD GENERAL NOTES

SIZES OF FILLET WELD FOR WEB TO FLANGE WELD.

WEB THICKNESS	FLANGE THICKNESS		
	3/16"	1/4" TO 1/2"	OVER 1/2"
10 GA. & 3/16"	3/16"	3/16"	3/16"
1/4"	SEE NOTE A	3/16"	1/4"
5/16"		1/4"	5/16"
3/8"		5/16"	3/8"
OVER 3/8"	SEE NOTE C		

NOTES:

A. 3/16" FLANGES ARE NOT TO BE USED FOR WEB THICKNESS OF 1/4" OR OVER UNLESS SPECIFIED BY ENGINEERING.

B. WELD SIZE EQUAL TO THICKNESS OF WEB.

C. FOR WEB THICKNESS OVER 3/8" ALL FILLET SIZES ARE TO BE SPECIFIED BY ENGINEERING.

D. WELD BOTH SIDES OF WEB TO FLANGE 3" BEYOND BOTH ENDS OF BRAKET.

E. MINIMUM WELD SIZES ARE DETERMINED BY THE FOLLOWING CRITERIA:

(t = THICKNESS OF THINNER PART)

IF t < 1/2" WELD SIZE = THICKNESS OF THINNER PART + 1/16"

IF t ≥ 1/2" WELD SIZE = FULL PENETRATION

F. WELD SIZE IS TO BE 1/16" LESS THAN THICKER PART, BUT NOT TO EXCEED THICKNESS OF THINNER PART. (MAX SIZE: 5/8")

G. OPPOSITE SIDE WELD LENGTH TO BE "a" DIMENSION PLUS 3 INCHES, AND "b" DIMENSION PLUS 3 INCHES.

H. THE PARTS TO BE JOINED BY FILLET WELDS SHALL BE BROUGHT INTO AS AS CLOSE CONTACT AS PRACTICABLE. THE ROOT OPENING SHALL NOT EXCEED 3/16 INCH.
IF THE SEPARATION IS GREATER THAN 1/16 INCH, THE LEG OF THE FILLET WELD SHALL BE INCREASED BY THE AMOUNT OF THE ROOT OPENING

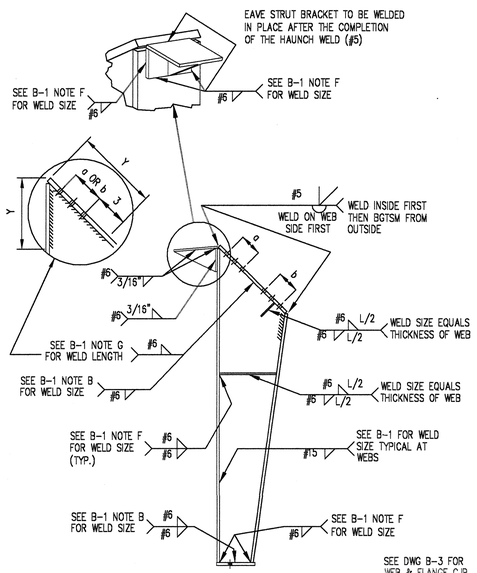

TYPICAL COLUMN

BGTSM = BACK GOUGE TO SOUND METAL (TYP.)
SEE B-1 NOTE H FOR ALL FILLET WELDS
#5, #6 ETC. ARE WPS NUMBERS.
SEE WELD STANDARD SHEET FOR WPS DESCRIPTION

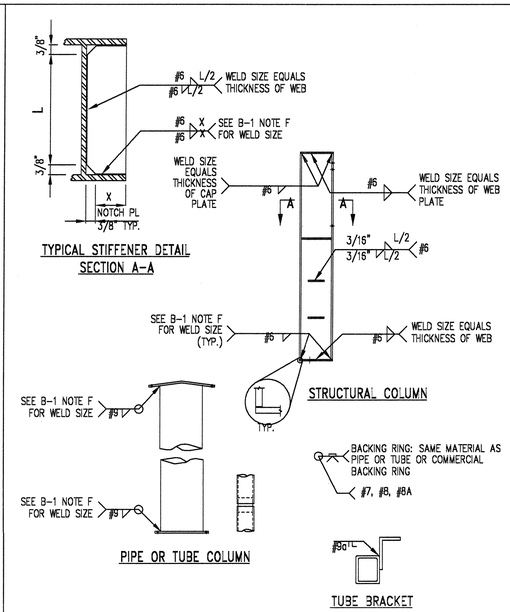

TYPICAL STIFFENER DETAIL SECTION A-A

STRUCTURAL COLUMN

PIPE OR TUBE COLUMN

TUBE BRACKET

STRUCTURAL DETAILS

SEE B-1 NOTE H FOR ALL FILLET WELDS
#5, #6 ETC. ARE WPS NUMBERS.
SEE WELD STANDARD SHEET FOR WPS DESCRIPTION

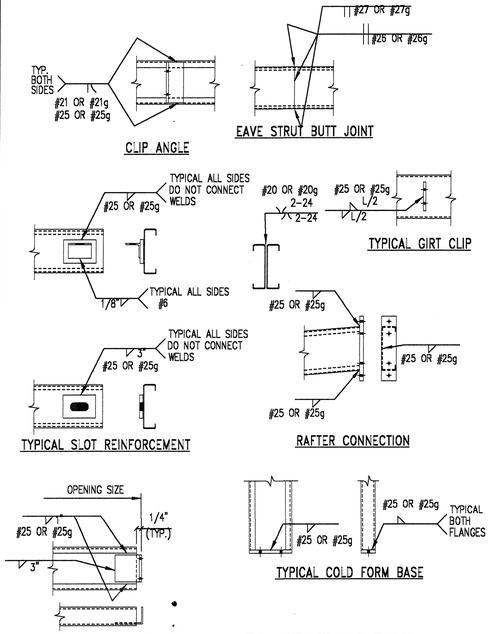

SEE B-1 NOTE H FOR ALL FILLET WELDS
#5, #6 ETC. ARE WPS NUMBERS.
SEE WELD STANDARD SHEET FOR WPS DESCRIPTION

B0001

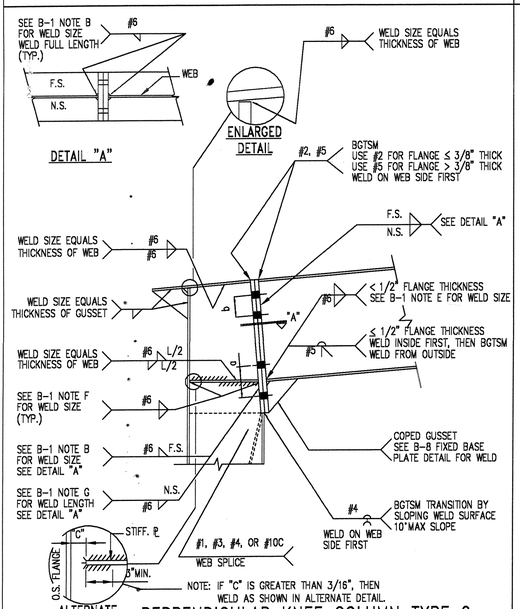

PERPENDICULAR KNEE COLUMN TYPE 2

BGTSM = BACK GOUGE TO SOUND METAL (TYP.)
SEE B-1 NOTE H FOR ALL FILLET WELDS
#5, #6 ETC. ARE WPS NUMBERS.
SEE WELD STANDARD SHEET FOR WPS DESCRIPTION

B0006

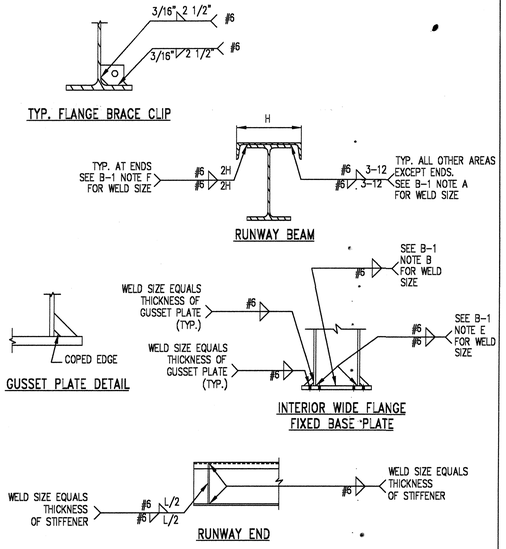

SPECIAL DETAILS

SEE B-1 NOTE H FOR ALL FILLET WELDS
#5, #6 ETC. ARE WPS NUMBERS.
SEE WELD STANDARD SHEET FOR WPS DESCRIPTION

B0010

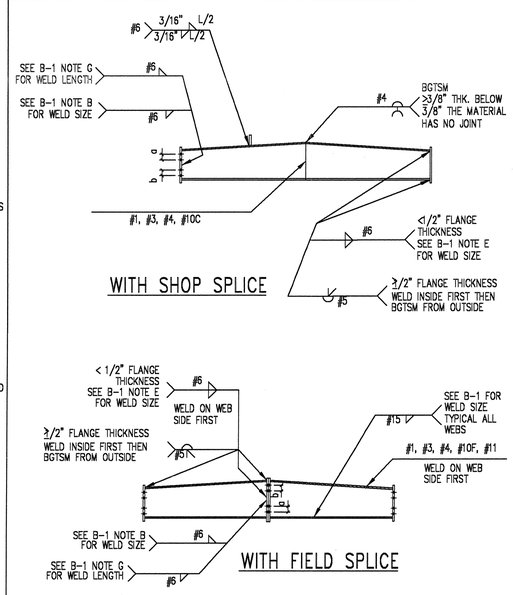

FLAT BOTTOM RAFTERS TYPE I

BGTSM = BACK GOUGE TO SOUND METAL (TYP.)
SEE B-1 NOTE H FOR ALL FILLET WELDS
#5, #6 ETC. ARE WPS NUMBERS.
SEE WELD STANDARD SHEET FOR WPS DESCRIPTION

B0016

WPS #	DESCRIPTION	WELD CODE	PROCESS	PREQ	POSITION	LIMITATION	PLANT LOCATIONS F	T	MA	A	L	MO	G	CH	CA
#1	B-L1b-GF	SQ. GROOVE BUTT JOINT	AWS D1.1-02	GMAW	YES	1G	3/8" Max.	X	X	X		X	X	X	X
#2	TC-L1-GF	SQ. GROOVE BUTT JOINT	AWS D1.1-02	GMAW	YES	1G	T1=3/8" Max.	X	X	X		X	X	X	X
#3	B-U2-GF	SINGLE-U-GROOVE	AWS D1.1-02	GMAW	YES	1G	2" Max.	X	X	X		X	X	X	X
#4	B-U6-GF	SINGLE-V-GROOVE	AWS D1.1-02	GMAW	YES	1G	2" Max.	X	X	X		X	X	X	X
#4a	B-P1c	SQUARE GROOVE (P.#)	AWS D1.1-02	GMAW *	YES	2G	1/2" Max.	*							
#5	HAUNCH H-529	SINGLE BEVEL GROOVE	AWS D1.1-02	GMAW	PQR	1G	2" Max.	X	X	X	X	X	X	X	X
#6	WPS-3F112	FILLET	AWS D1.1-02	GMAW	YES	2F	5/8" Max.	X	X	X	X	X	X	X	X
#7	WPS-3F112a	FILLET	AWS D1.1-02	GMAW	YES	2F	5/16" FILLET	X	X	X	X	X	X	X	X
#8	GROOVE-PIPE	SINGLE-V-GROOVE for PIPE	AWS D1.1-02	GMAW	PQR	1G ROT	4" & up-3/4" max T	X	X						
#8a	GROOVE-TUBE	SINGLE-V-GROOVE for TUBE	AWS D1.1-02	GMAW	PQR	1G ROT	4" & up-3/4" max T	X	X						
#9	FILLET-PIPE	FILLET WELD for PIPE	AWS D1.1-02	GMAW	PQR	2F ROT	5/16" FILLET			X					
#9a	BTC-P10-GF	FLARE-BEVEL for TUBE	AWS D1.1-02	GMAW	YES	1G	3/16" WALL min.	X	X						
#10	B-U6-SAW/GMAW	SINGLE-U-GROOVE	AWS D1.1-02	SA/GM	PQR	1G	1 1/2" Max.				X	X	X	X	X
#10b	B-L1-SAW/GMAW	SQUARE GROOVE (2 SIDES)	AWS D1.1-02	SA/GM	PQR	1G	5/16" Max.				X	X	X	X	X
#10A	B-U6-SAW	SQUARE GROOVE (1 SIDE)	AWS D1.1-02	SAW	YES	2F	3/8" Max.				X	X	X	X	X
#15	FILLET-SAW-CRII	CONRAC FILLET (5/64" WIRE)	AWS D1.1-02	SAW	YES	2F	5/8" Max. WEB					X			
#15a	T-FILLET-SAW	CONRAC FILLET (1/16" WIRE)	AWS D1.1-02	SAW	YES	2F	5/8" Max. WEB					X			
#20	WPS-3GF8-pld.	FLARE-V-GROOVE BUTT JOINT	AWS D1.3-98	GMAW	PQR	1G	16 ga. to 12 ga.	X	X	X	X	X	X	X	X
#20g	WPS-3GF8-Galv	FLARE-V-GROOVE BUTT JOINT	AWS D1.3-98	GMAW	PQR	2G	16 ga. to 12 ga.	X	X	X	X	X	X	X	X
#21	WPS-3G19-pld.	FLARE BEVEL GROOVE	AWS D1.3-98	GMAW	PQR	1G	16 ga. to 12 ga.	X	X	X	X	X	X	X	X
#21g	WPS-3G19-Galv	FLARE BEVEL GROOVE	AWS D1.3-98	GMAW	PQR	2G	16 ga. to 12 ga.	X	X	X	X	X	X	X	X
#25	WPS-3G110-pld.	T-JOINT FILLET	AWS D1.3-98	GMAW	PQR	2F	16 ga. to 12 ga.	X	X	X	X	X	X	X	X
#25a	T-FILLET-.045 wire	T-JOINT FILLET w/ .045 wire	AWS D1.3-98	GMAW	YES	2F	16 ga. to 12 ga.	X	X	X	X	X	X	X	X
#25g	WPS-3G110-Galv	T-JOINT FILLET	AWS D1.3-98	GMAW	PQR	2F	16 ga. to 12 ga.	X	X	X	X	X	X	X	X
#26	WPS-3G111-pld.	SQ. GROOVE: BUTT BOTH SIDES	AWS D1.3-98	GMAW	PQR	1G	16 ga. to 12 ga.	X	X	X	X	X	X	X	X
#26g	WPS-3G111-Galv	SQ. GROOVE: BUTT BOTH SIDES	AWS D1.3-98	GMAW	PQR	1G	16 ga. to 12 ga.	X	X	X	X	X	X	X	X
#27	WPS-3G111A-pld.	SQ. GROOVE: BUTT ONE SIDE	AWS D1.3-98	GMAW	PQR	1G	16 ga. to 12 ga.	X	X	X	X	X	X	X	X
#27g	WPS-3G111AGalv	SQ. GROOVE: BUTT ONE SIDE	AWS D1.3-98	GMAW	PQR	1G	16 ga. to 12 ga.	X	X	X	X	X	X	X	X
	TACK-GMAW-3F	TACK WELD VERTICAL	AWS D1.1-02	GMAW	PQR	3F	VERT. DOWN ONLY	X	X	X					
	TACK-GMAW	TACK WELD HORIZONTAL	AWS D1.1-02	GMAW	PQR	2F	HORIZ. ONLY	X	X	X					

F – FAIRVIEW, HOUSTON
T – TALLAPOOSA, GA
MA – MATTOON, IL
A – ATWATER, CA
L – LUBBOCK, TX
MO – MONTERREY, MEXICO
G – GRAPEVINE, TX
CH – CHESTER, SC
CA – CARRYVILLE, TN

WPS

CITY OF PHOENIX
Development Services Department
BY: (KUSH BUDRZAN)
JUN 19 2007
This set of plans has been reviewed for STRUCTURAL and ARCHITECTURAL requirements prior to issuance of Building Permit and shall be kept at the construction site. Such review shall not convene the Building Official from requiring correction of errors in the plans where such errors are subsequently found to be in violation of any law or ordinance.

B0003

B0008

B0014

NOTE:

1. These drawings are intended to depict general installation of item(s) described above. Some item(s) may have been omitted for clarity of presentation. Consult your erection manual or additional S-Sheets for further guidelines and/or clarifications.

ATTENTION INSTALLER: In the event that a discrepancy or error arises with materials shipped for this project or these construction drawings, the installer must notify the manufacturer prior to correcting. If manufacturer is not notified, manufacturer wi

REVISIONS

NO.	DATE	DESCRIPTION	BY	CK'D
A				
B				
C				
D				

Standard Details

Customer: YELLOWNIFE BUILDING SYSTEMS
End User: NATIONAL WATER WORKS
Location: PHOENIX, AZ

Det. By	Chk By	Date	Scale	Building ID	Job Number	Sheet Number	Issue
			N.T.S.	A	3505-233887	W-1	D