PARTS LIST

PART #	DESCRIPTION	QTY
A7263	CLIP ANGLE - BASE	2
A7256	SPLICE PLATE	16
A7257	SPLICE PLATE	16
123493	ANGLE - RUNG	54
A4622	CLIP ANGLE - RUNG	108
A7258	25' ANGLE RAIL	2
A7259	20' ANGLE RAIL	14
A7260	15' ANGLE RAIL	2
A6235	FORMED ℞ - BRACE	9

HARDWARE LIST

SYM	QTY	DESCRIPTION
I6	344	1/2Ø x 1 1/2 GS ASS'Y
I7	18	1/2Ø x 1 3/4 GS ASS'Y
I14	18	1/2Ø x 3 1/2 GS ASS'Y
J7	18	5/8Ø x 1 3/4 GS ASS'Y
LA	18	1/2" TYPE "A" LINDAPTER WITH MEDIUM TAIL
LC	18	1/2" TYPE "C" LINDAPTER
S4X	2	1/2Ø x 1 S.S. BOLT
SL4	2	1/2Ø STAINLESS STEEL LW
SF4	2	1/2Ø STAINLESS STEEL FW
RH4	2	1/2" CONCRETE ANCHOR
FW4	110	1/2" GALV F.W.

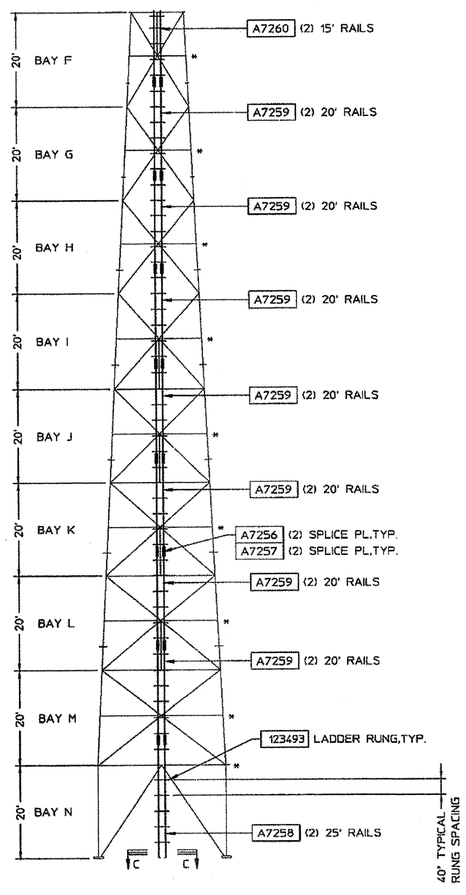

* SEE DETAIL "Z" FOR WAVEGUIDE LADDER SUPPORT AT THESE LEVELS.

WAVEGUIDE LADDER ELEV.
WAVEGUIDE LADDER MOUNTED ON OUTSIDE FACE OF TOWER
1/16" = 1'-0"

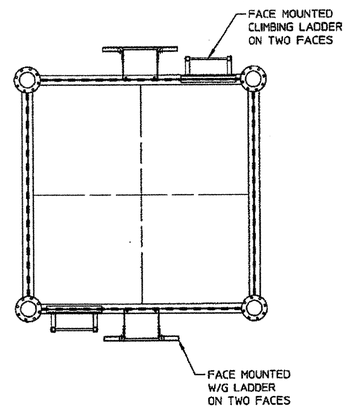

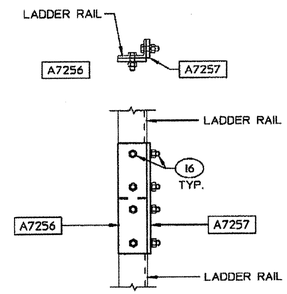

TYPICAL LADDER SPLICE
3"=1'-0"

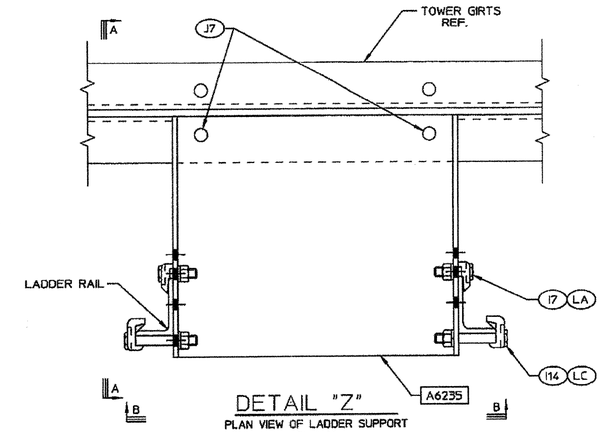

DETAIL "Z"
PLAN VIEW OF LADDER SUPPORT
3"=1'-0"

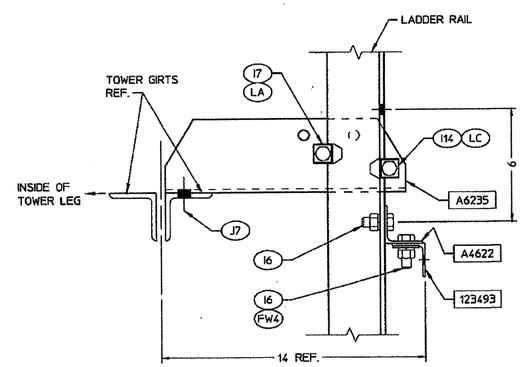

SECTION A-A
3"=1'-0"

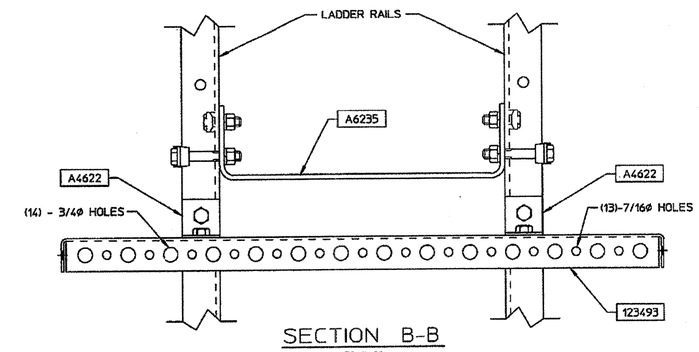

SECTION B-B
3"=1'-0"

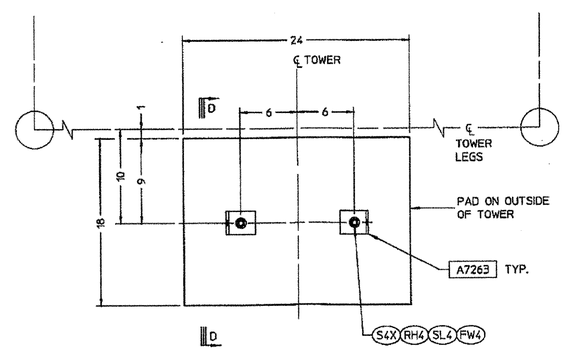

SECTION C-C
FOUNDATION PLAN
1 1/2"=1'-0"

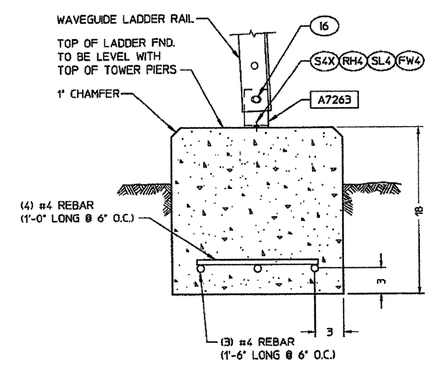

SECTION D-D
1 1/2"=1'-0"

A-139275

REV	DESCRIPTION	DATE	BY/CK
A	RELEASED DRAWING TO THE SHOP	25AUG08	JW/RJS

WAVEGUIDE LADDER
ARIZONA DEPT OF PUBLIC SAFETY
SITE: THOMPSON PEAK, AZ

valmont STRUCTURES
1-877-467-4763 Plymouth, IN
1-800-547-2151 Salem, OR

BY SJ	CK MF	D-125352-4
DATE 13JUN08		
S.O. 11841-08		SHEET: 4 OF 6